SKY MAN® INTERNATIONAL

OCTO 500/800 E - TRACTION HOIST

MOTOR OPTIONS	SAFE WORKING CAPACITY	CLIMBING SPEED	POWER CONSUMPTION	SELF-WEIGHT	RECOMMENDED STEEL WIRE ROPE
220-240V/50Hz 1 phase	500 kg	8.5m/min	6.0 A	68 kg	**Ø9mm** 4x36WS-Polyprop. core-galvanised
220-240V/50Hz 3-phase	500 kg	8.5m/min	3.5 A	68 kg	
380-440V/50Hz 3-phase	500 kg	8.5m/min	2.5 A	68 kg	
220-240V/50Hz 3-phase	800 kg	8.5m/min	3.6 A	70 kg	
380-440V/50Hz 3-phase	800 kg	8.5m/min	2.6 A	70 kg	

FEATURES

- **MODULAR CONSTRUCTION**
  for ease of maintenance and interchanging of power attachments.
- **SELF REEVING**
  for easier and faster rigging.
- **MOTOR PROTECTION**
  a thermal overload protects the electromotor against overheating.
- **FAIL SAFE PRIMARY BRAKE**
  brake positively locked with power switch in off position.
- **LOW CURRENT DRAW**
  3-phase hoist only draws 2.5 A at full load.
- **CONTROL OPTIONS**
  hoist mounted pendant and central control available.
- **LOW ROPE WEAR FACTOR**
  no point loads to overstress wire.
- **INDEPENDANT SECONDARY OVERSPEED BRAKE**
  overspeed safety brake with manual trip and reset lever mounted on secondary safety wire (see data sheet SAFETY BRAKE)
- **EMERGENCY DESCENT**
  in case of power failure, when the primary brake is released, the platform will descent at a controlled speed.
- **APPROVAL**
  complies with all current safety standards

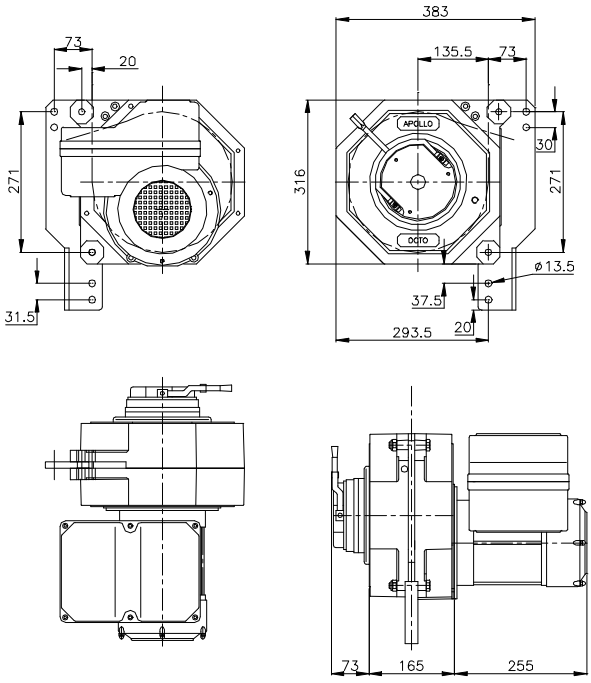

OPTIONS

- **OVERLOAD-UNDERLOAD**
  to protect against platform overloading.
- **TOP LIMIT SWITCH**
  halts ascent at preset height.
- **ANTI-TILT DEVICE**
  ensures platform does not tilt beyond preset maximum.
- **POWER SUPPLY**
  50Hz and 60 Hz available.

ZONE 3, HOEK 76, unit 43/44, 2850 BOOM (BELGIUM) TEL: 32-3-844.65.86 FAX: 32-3-844.29.56